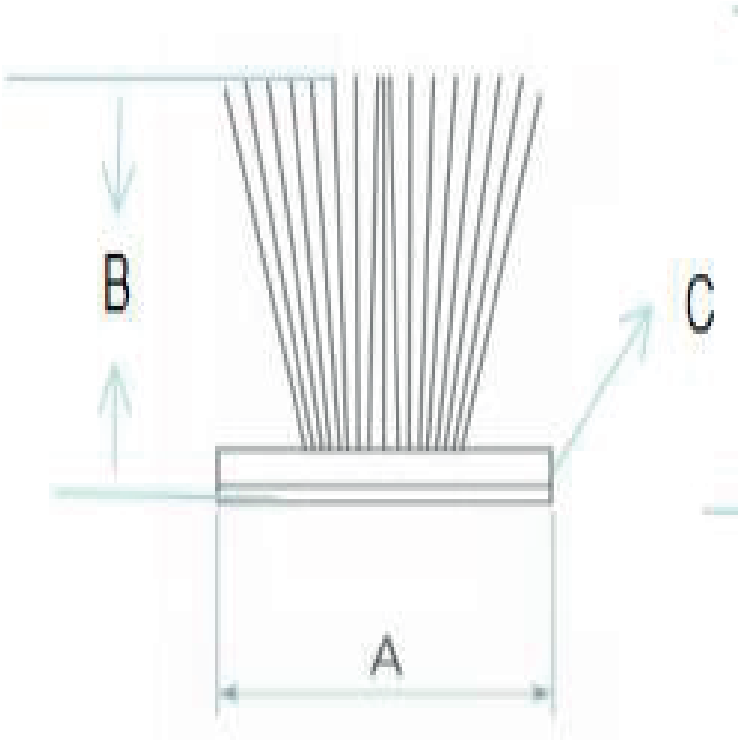

A:Base: 6.8MM±0.1MM
B:Brush: 10MM±0.2MM
C:Thickness:1MM±0.2MM

DELOCK
we move the world

Dat	2021 / 09 / 29	Title: Brush strip self-adhesive 10 mm - length 5 m black	
Unit	mm	Item no.	66894
Projection		Barcode	4043619668946
Rev	A	File No.	88332