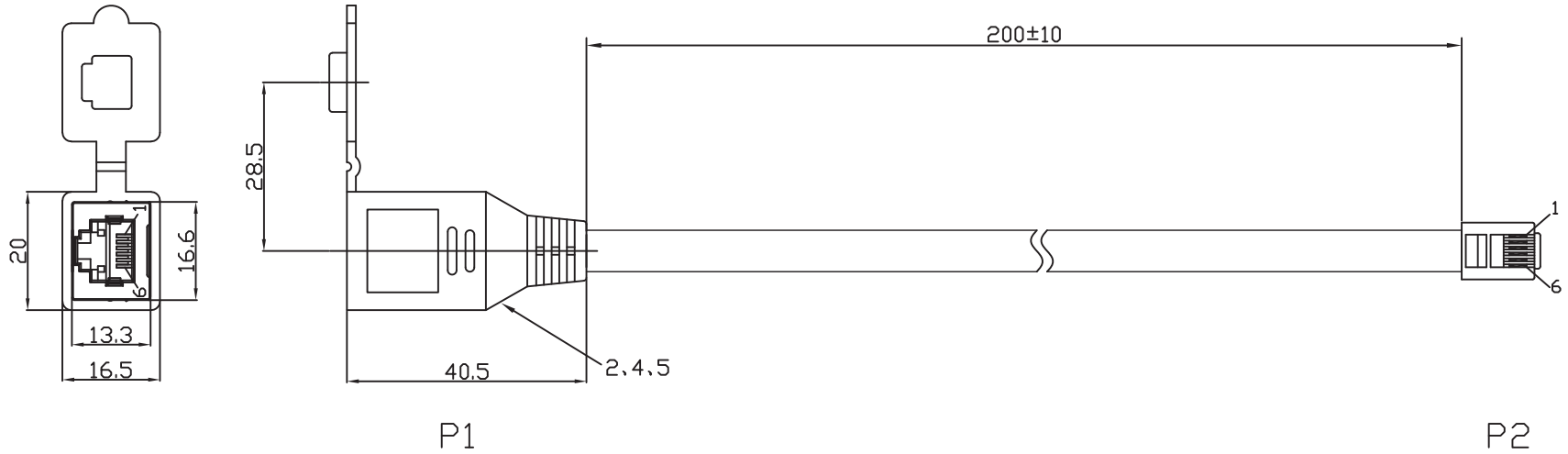

P1		P2
1	———	1 WHITE
2	———	2 BLACK
3	———	3 RED
4	———	4 GREEN
5	———	5 YELLOW
6	———	6 BLUE

DELOCK® we move the world

Dat	2023 / 09 / 07	Title: Cable RJ12 plug to RJ12 jack with protective cap 20 cm black	
Unit	mm	Item no.	88009
Projection		Barcode	4043619880096
Rev	A	File No.	88444